Hall Of Fame
Ukulele Cappo 3

Intro / Verse 1
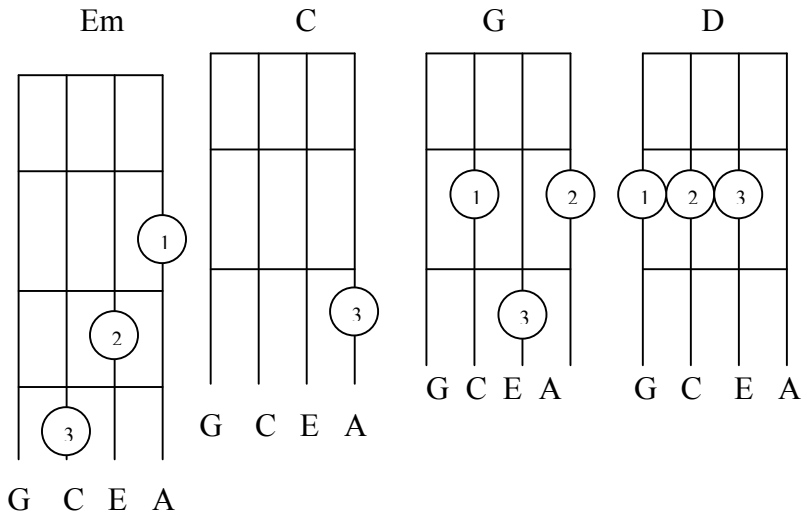
Em			C			G			D		
/	/		/	/		/	/		/	/	
1	+	2	3	+	4	1	+	2	3	+	4